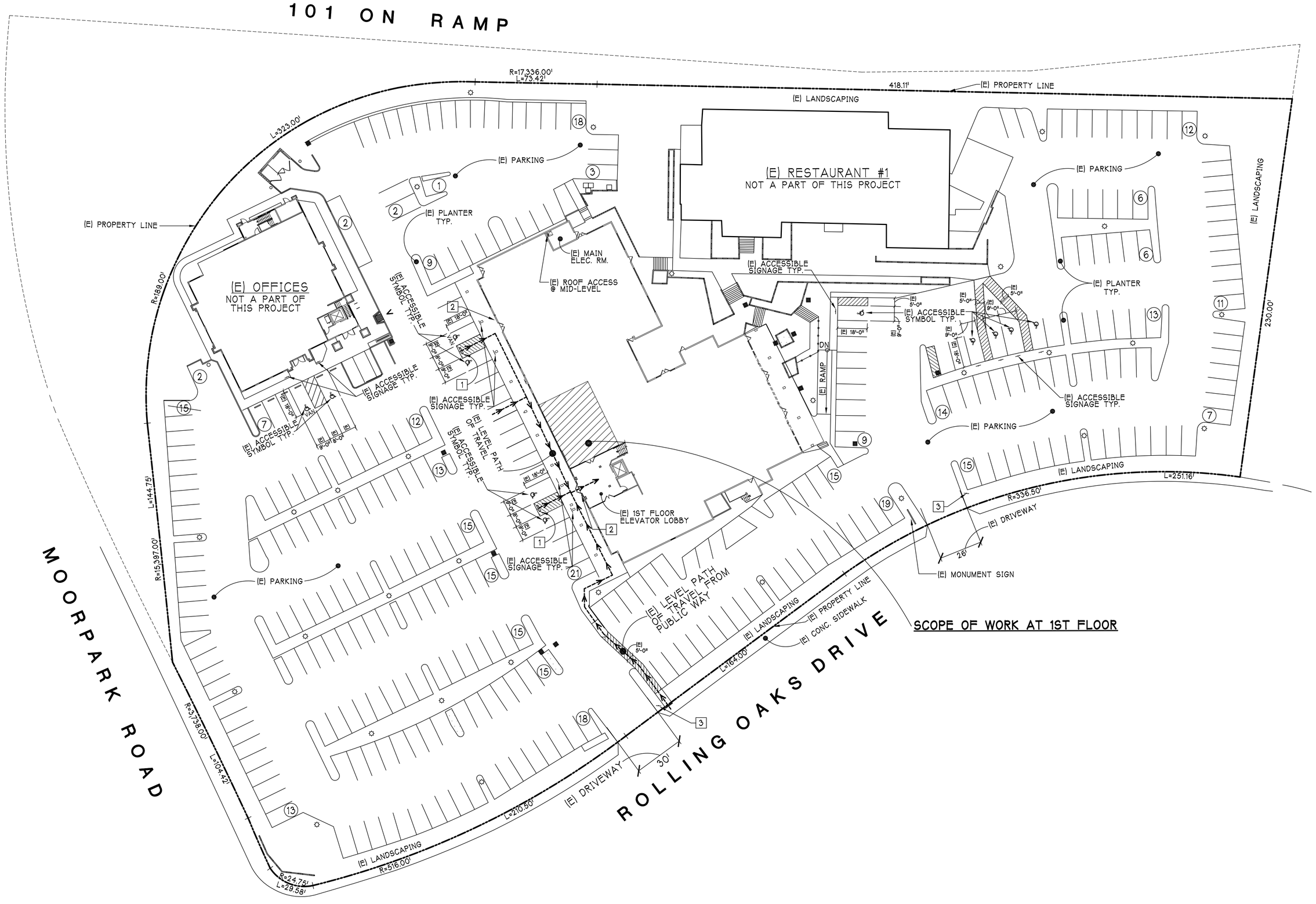

SCOPE OF WORK AT 1ST FLOOR

SITE PLAN
SCALE: 1'-0"=30'-0"

SITE NOTES:

1. THE WORDS "NO PARKING" SHALL BE PAINTED ON THE PAVEMENT WITHIN THE LOADING UNLOADING ACCESS AISLE. THE NOTICE SHALL BE PAINTED IN WHITE LETTERS NO LESS THAN 12 INCHES HIGH AND LOCATED SO THAT IT IS VISIBLE TO TRAFFIC ENFORCEMENT OFFICIALS. CBC 11B9B.3.
2. (E) ACCESSIBLITY SIGNAGE ADJACENT TO THE PRIMARY ENTRANCE DOOR.
3. AN ACCESSIBLE ENTRANCE SIGN, PER CBC 11B9B.4 SHALL BE LOCATED AT EACH PARKING LOT ENTRANCE AND INLCUDE, "TOWED VEHICLES MAY BE RECLAIMED AT VENTURA COUNTY SHERIFF OR BY TELEPHONING (805) 494-8200. LETTERS AND NUMBERS SHALL BE PERMANENT AND MEASURE A MINIMUM HEIGHT OF ONE INCH (1"). MARKERS AND/OR LIQUID PAPER ARE NOT ACCEPTABLE.

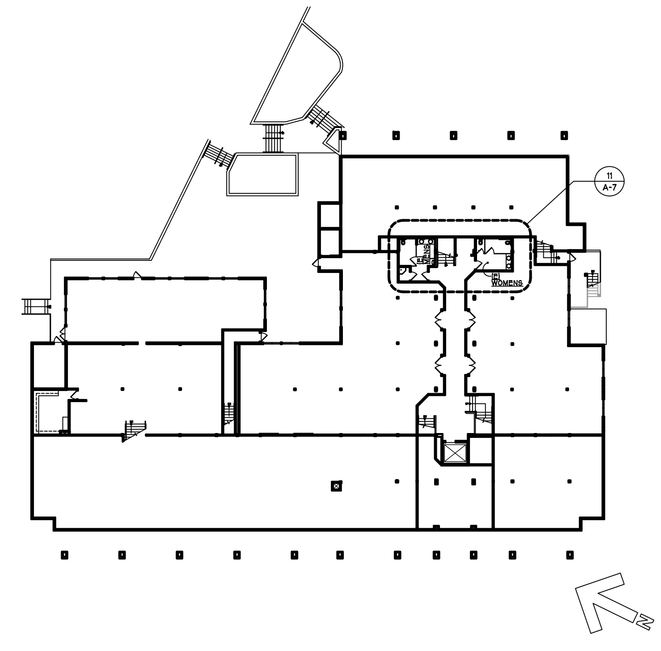

ACCESSIBLE TOILETS @ MID-LEVEL

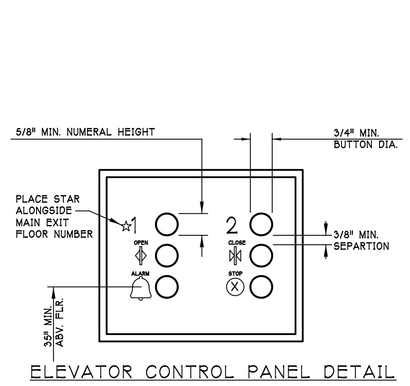

ELEVATOR CONTROL PANEL DETAIL

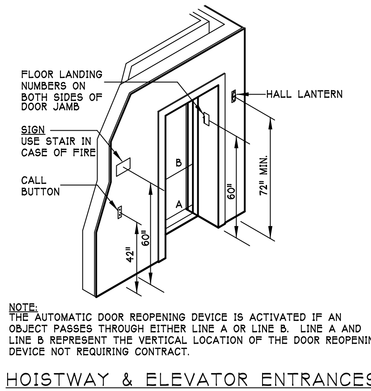

HOISTWAY & ELEVATOR ENTRANCES

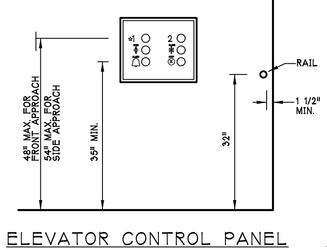

ELEVATOR CONTROL PANEL

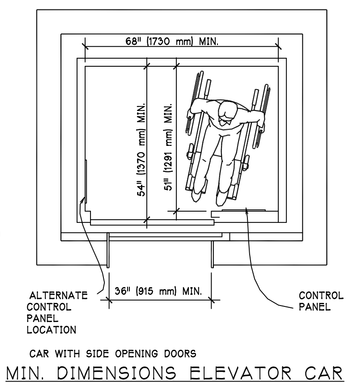

MIN. DIMENSIONS ELEVATOR CAR

(E) ACCESSIBLE ELEVATOR DETAILS

SCALE: N.T.S. | 1

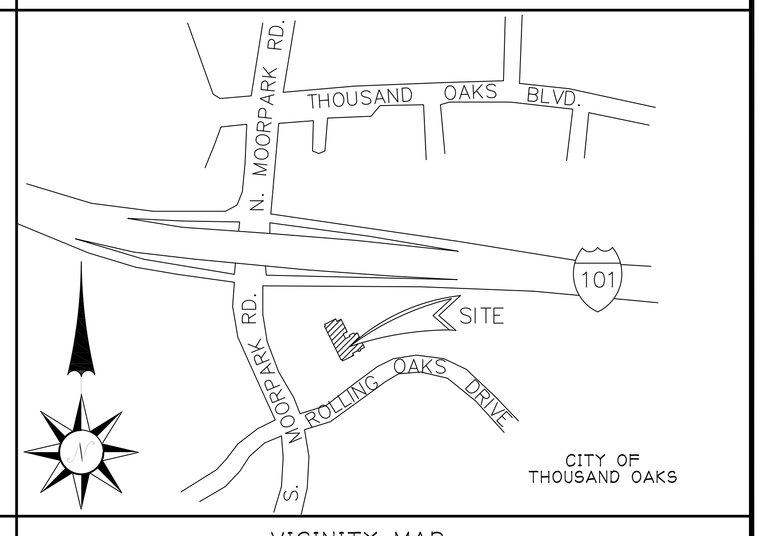

VICINITY MAP

SCALE: 2

DDS-77-1PL-A3.DWG

DATE	REVISIONS

HENEY DONG & ASSOCIATES
ARCHITECTS, AIA.
22900 VENTURA BLVD., SUITE 120, WOODLAND HILLS, CA 91364 818-224-2929
ARCHITECTURE • PLANNING • INTERIORS

LICENSED ARCHITECT HENEY DONG NO. C 9770 EXP. 8-31-19 STATE OF CALIFORNIA

JOB TITLE
SHARON SHAMOIEL D.M.D.
77 ROLLING OAKS DRIVE, STE. #104
THOUSAND OAKS, CA. 91361

SHEET TITLE
SITE & ACCESSIBLE LEVEL PATH OF TRAVEL PLAN

DRAWN BY:	J.F.
CHECKED BY:	H.D.
SCALE:	N.T.S.
DATE:	8-03-18
JOB NO.:	17-540
SHEET NO.	A-3